San Diego State University
Center for Student Success in Engineering

MECHANICAL- BIOENGINEERING CURRICULUM GUIDE

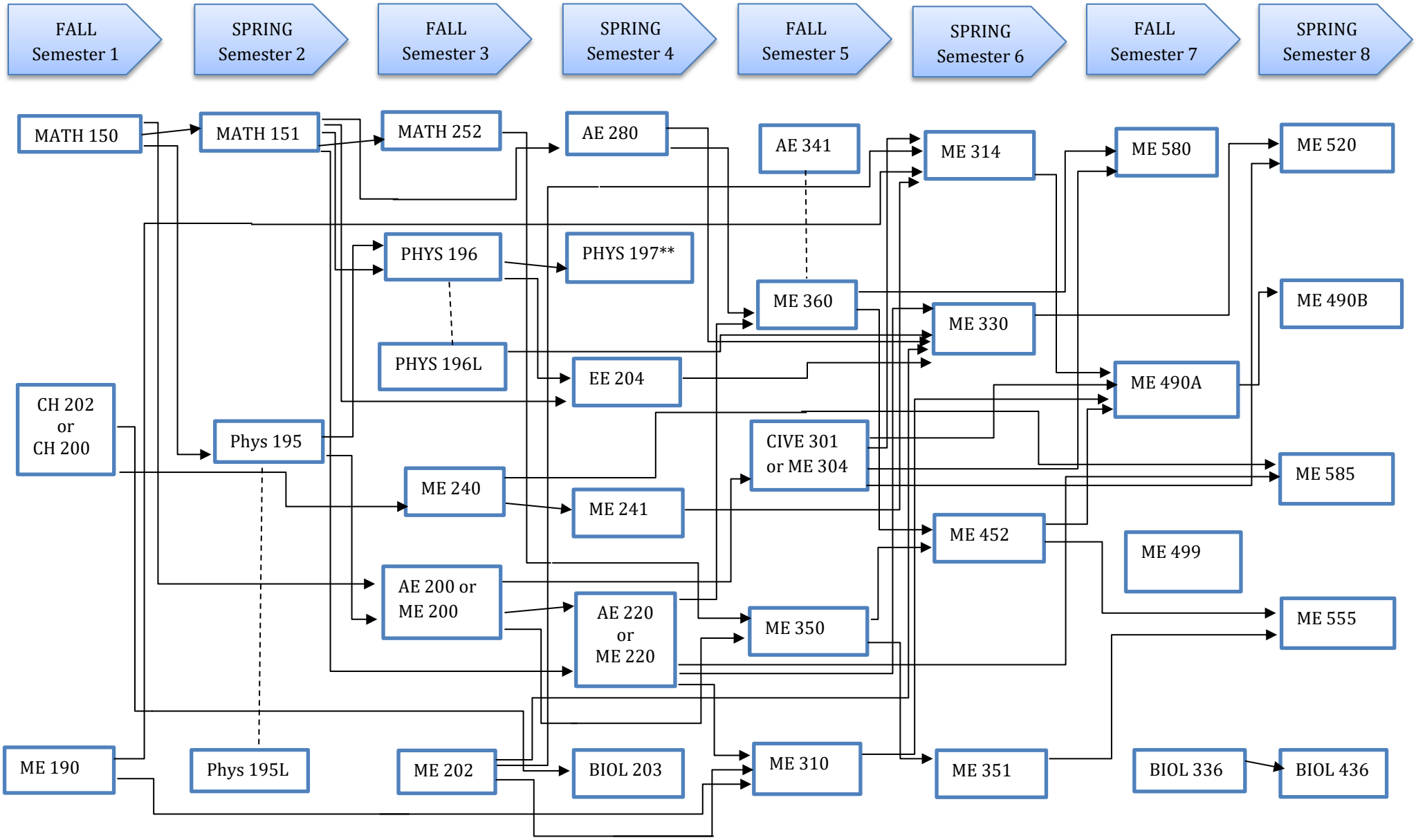

Catalog Year 2020-21 ----------Credit or Concurrent Enrollment _____Prerequisite **Course Offered Only on This Semester